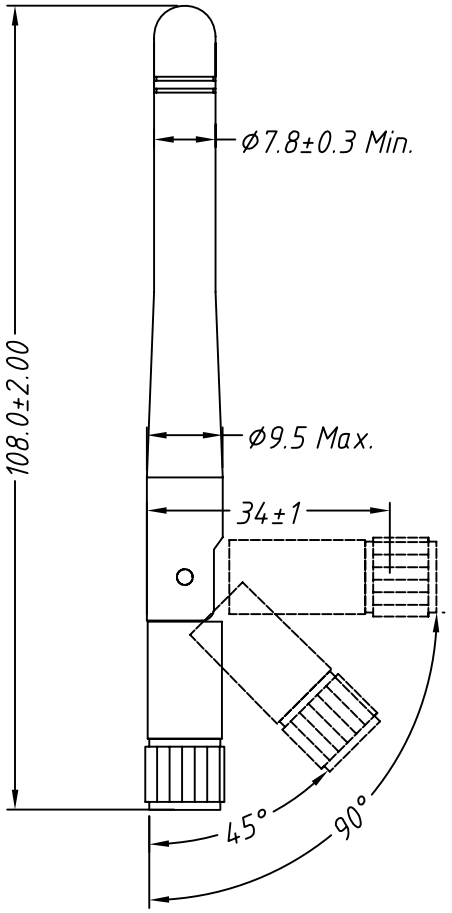

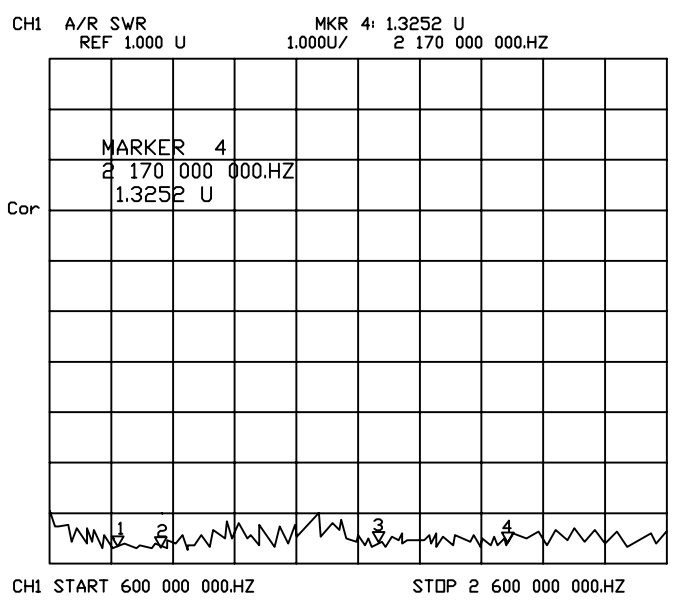

Specification:

Frequency : 824~960/1710~2170MHz

Gain : 3dBi

Vswr : 1.5 Max.

Impedance : 50 Ω

Polarization : Vertical

Radiation : OMNIDIRECTIONAL

Connector : RP SMA-J

Lightning protection: DC Grounding

Operating Temperature : -30°C to +70°C

GENERAL TOLERANCE	ANGLE TOLERANCE	PROJECTION		Description:
X. ±0.60	X. ±5°	UNITS	mm	3G Antenna Bending
.X ±0.38	.X ±3°	SHEET SIZE	A4	
.XX ±0.25	.XX ±2°		KLS P/N:	KLS1-3GB011108
Draw by: Date	2016-11-11			
Check by:: Date	2016-11-11			KLS ELECTRONIC CO., LTD.
SCALE	SHEET OF			